ENERBATT 3G
(Battery Monitoring System)

Ablerex
every moment counts

EXTEND BATTERY LIFE



Enerbatt has been specially designed to continuously monitor batteries and provide real-time information, ensuring the batteries are in good state of health. With this critical battery status information, a level of reliability is maintained by identifying and replacing faulty battery before a failure occurs. The battery life is further extended with the built-in function of the voltage equalizer.
This easy to install battery monitoring system greatly simplify battery mainteance and monitoring, especially ideal in mission critical areas.

PERFECT FOR:

- Datacenter
- Large batteries installations
- Critical buildings
- 24/7 Monitoring

FEATURES

- Voltage Equalizer: equalizes the voltage of each battery to improve battery life.
- Easy Installation: save installation costs.
- RS485 communications between RF receiver and touch screen to enhance coverage.
- Graphic LCD touch screen
- Real Time Monitoring: block voltage, block impedance, temperature, string voltage & current.
- 1Hz sampling rate
- State of Health (SOH) monitoring to evaluates battery condition.
- State of Charge (SOC) measurement indicating remaining battery charge.
- Protecting cut off voltage: preserves batteries form deep discharge.
- Color bar/curve diagrams.
- Programmable alarm level.
- Alarm notifications via e-mail & dry contact.
- Ethernet/RS-485 for Remote Monitoring.
- Manage up to 750 batteries per system, max. up to 12,000 batteries in one room.
- Available for different battery voltage and capacity.

OPTIONS

- Temperature sensors for ripple current measurement as per IEEE Standards 1188-2005 'Recommended Practice for Maintenance, Testing, Replacement of VRLA Batteries in Stationery Applications'
- SMK version up to 120V for higher precision
- Dedicated software for remote monitoring and data storage

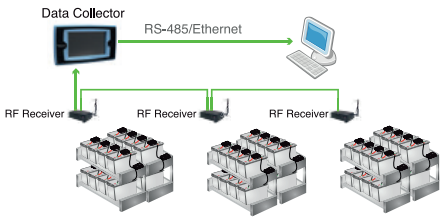

BUILT-IN BATTERY VOLTAGE EQUALIZER

The Automatic Battery Voltage Equalizer brings each battery block voltage close to the ideal value and balance the voltage across all the batteries in the system. This function prevents overcharging and undercharging of each battery and increase battery life expectancy by 30%.

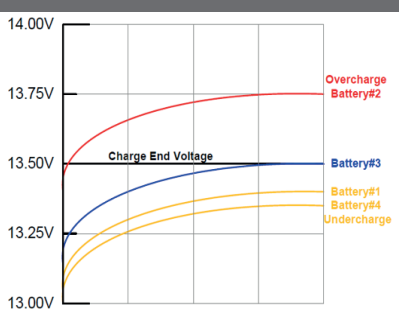

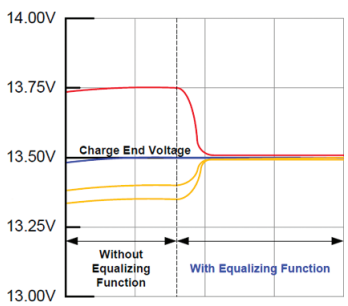

SPECIFICATIONS

MODEL		SPECIFICATIONS			
BMS-DC-LCDII (Data Collector)	Display	LCD 7" Graphic Touch Screen			
	Input Power Supply	12Vdc			
	Power Consumption	≤ 9W			
	Communication Ports	Ethernet x 1, RS-485 Modbus RTU x2 - 3x output and 1x input dry contact			
	Monitoring RF Receiver	Up to 63 RF receivers			
	Monitoring Nodes	Maximum 750			
	Storage Media	Up to 16 Gigabyte SD/ flash memory card			
	Dimensions (WxHxD) mm	260 x 150 x 57			
	Weight (Kg)	0.85			
BMS-RFR (RF Receiver)	Input power supply	12Vdc			
	Power consumption	≤ 3W			
	Receiving Protocol	Ablerex Proprietary RF 2.4 GHz Technology*			
	Dimensions (WxHxD) mm	129 x 70 x 35.5			
	Weight (Kg)	0.4			
BMS-BMK (Battery Measure Kit)	Block voltage	2V	6V	12V	
	Voltage measurement range	1.48~4.00V	4.2~8.0V	8.5~16.0V	
	Accuracy	±5 mV	±5 mV	±10 mV	
	Battery impedance resolution	2μΩ	10μΩ	>65 Ah	<65 Ah
				15 μΩ	25 μΩ
	State of Charge (SOC)	±5% Accuracy ±1% Resolution			
	State of Health	±5% Accuracy ±1% Resolution			
	Temperature measurement **	0~100°C ±1°C			
	Power consumption	≤ 0.5W			
	Input impedance	≥ 1MΩ			
	Dimensions (WxHxD) mm	100 x 27 x 70			
	Weight (Kg)	0.1			
SMK (String Measure Kit)	Voltage measurement range	0-120V	120-750V		
	Accuracy	±0.2% of rated voltage			
	Temperature measurement **	0~100°C ±1°C			
	Current Measurement ***	0~3000 A			
	Input power supply	12 VDC			
	Power consumption	≤1.5W			
	Input impedance	≥1MΩ			
	Dimensions (WxHxD) mm	100 x 27 x 70			
	Weight (Kg)	0.09			

Specifications subject to change without notice

* Maximum transmitting distance is rated at 50m in a non-concealed room or cabinet. Recommended distance is less than 20m for optimal performance

** Optional temperature sensor (TES) is required for temperature measurement

*** Optional Hall Current transformer (HCT) s required for battery current measurement

Designed & Engineered by: Ablerex every moment counts