ENERSINE™ APF

THE NEW GENERATION OF MODULAR ACTIVE FILTERS FOR HARMONICS & REACTIVE CURRENT COMPENSATION

Rack-Mount Frame System



Key Features
- Modular and Scalable System Architecture.
- Universal Voltage: 208V/400V/480V without Transformer.
- Harmonic compensation for 3-wire or/and 4-wire system.

Powerful Performance
- Eliminates harmonics current from 2nd to 51st order.
- Close / Open Loop Selectable Control.
- Ultra-fast response to load changes within milliseconds.
- Load balancing between phases and unload neutral wire.
- Programmable Harmonics Compensation and Power Factor Correction.

Expandable Capabilities
- Space-saving high power density design.
- Different rated current filter system can wired in Parallel with common coupling CT.

Easy to control
- HMI utilising 7inch Coloured LCD Touch Screen for advanced control and monitoring.

Typical Application
- Data centers, semiconductor and electronics manufacturers.
- Chemical industry, Oil and gas, Steel plants.
- Water treatment plants, Automotive industry.

Operating Principle

Enersine™ APF measures and monitors the entire load current through external auxiliary coupling current transformers (CT) mounted on the AC line, removes the fundamental frequency component and injects opposite phase harmonic current to cancel harmonic current in the electrical distribution system. By canceling the harmonic currents in the circuit, there will be:

(1) No risk of harmonic resonance;
(2) Significantly reduce the voltage waveform distortion;
(3) Reduced voltages drop and temperature rise on transformers & cables;
(4) Improved power factor.

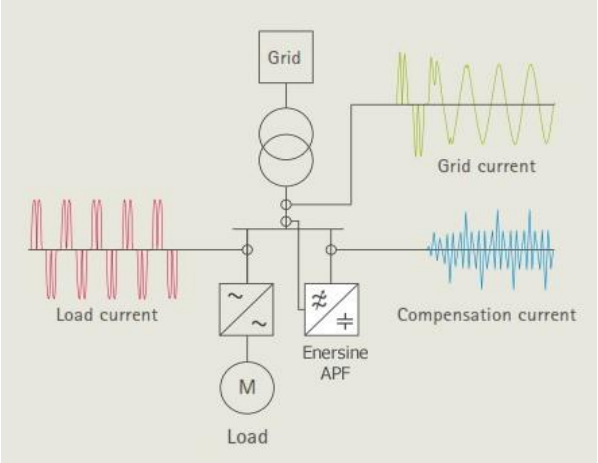

Numerous Connection Options

External auxiliary coupling current sensing transformers (CT) are the essential components in all active filter applications and generally all Active Filters are classified as source sensing or load sensing types depending on the point of coupling of the auxiliary CT.

Enersine™ APF is designed to have selective CT sensing configurations and numerous connection options. Different rated current of Enersine™ APF can be wired in parallel while connecting to the common external auxiliary coupling CT.

SOURCE SENSING (Close Loop)
Source-sensing require the external auxiliary CT to be coupled at the input supply source common to both the active harmonic filter and the harmonic generating equipment.

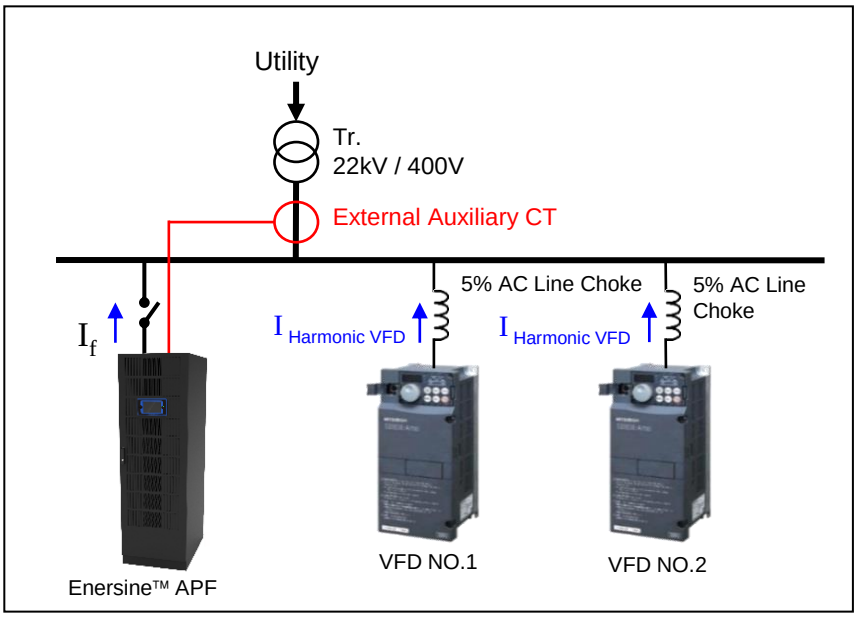

LOAD SENSING (Open Loop)
Load-sensing require the external auxiliary CT to be located nearest to the point of common coupling in the direction of the harmonic generating equipment.

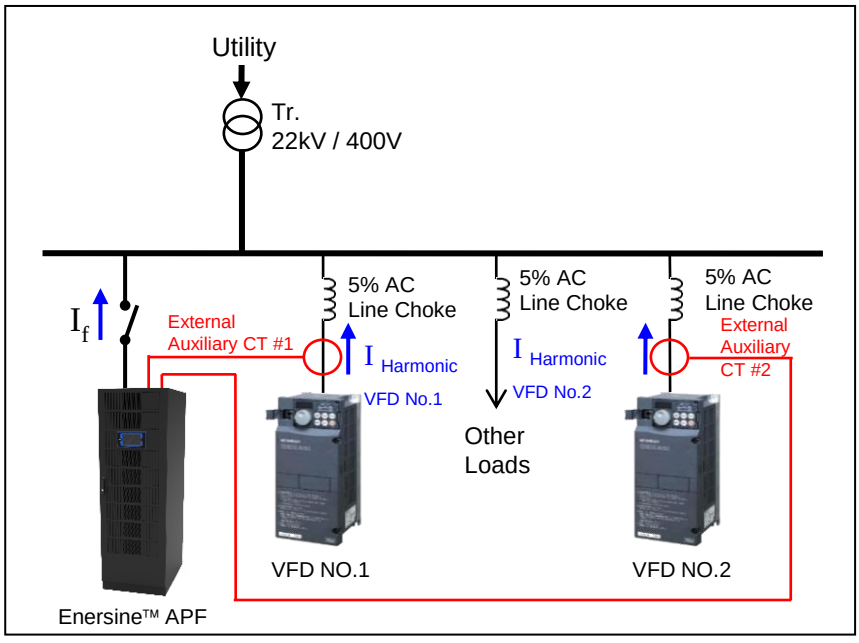

Intuitive Human Machine Interface

Enersine™ APF is equip with an intuitive Human Machine Interface (HMI), including a 7inch Coloured LCD Touch Screen, direct control and access to all parameters, waveforms and spectrums for management of both APF and system power quality.

Left View

Front View

Right View

Ethernet (TCP/IP)



SD Card Slot

Bottom View

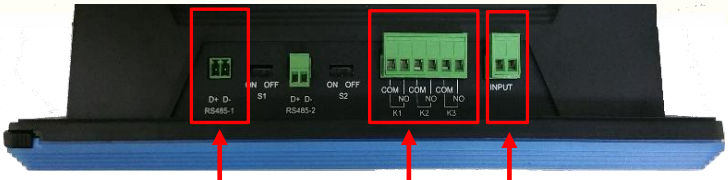

RS-485 (Modbus RTU Protocol)

3x Output Dry Contact

1x Input Dry Contact

Benefits of the 7inch Coloured LCD Touch Screen includes:

-Display filters parameters and functions without additional devices.
-Clear menu structure and display data in both tables and diagrams.
-Simple programming of filter function with input instruction.
-SD memory card records the system's operating statues and event logs.
-Intuitive operation and password protection.
-Waveforms are display side by side making it easy to compare and identify sinusoidal current and output current of the active filter.

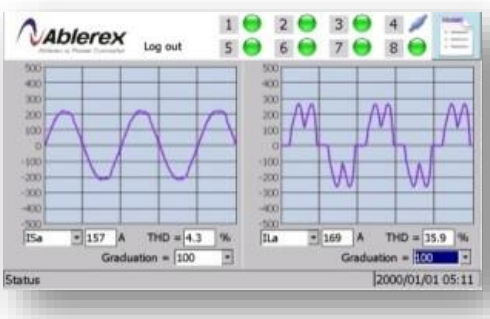





Modular & Scalable Architecture

Modularity principle: Maximum scope for extension

The compensation power electronics consisting 3-Level IGBT are housed in compact enclosed modules with speed controlled cooling fans for thermal dissipation. These $60A_{RMS}$ or $80A_{RMS}$ or $100A_{RMS}$ rated power modules (PM) are equip with live hot-plug connectors for ease of configuration and frame integration.

The compensation power can be sized accordingly and gradually extended using additional power modules (PMs) and frames. Flexible modular system to mix and match different rated power modules for optimum power rating.

The modular structure makes the Enersine™ APF series resilient to errors. Should a PM fails, the other PMs continue to function until the error is rectified. Installation and maintenance are make easy with hot plug-in operation and front fan replacement. Reduced downtime with MTTR of less than 60 minutes.

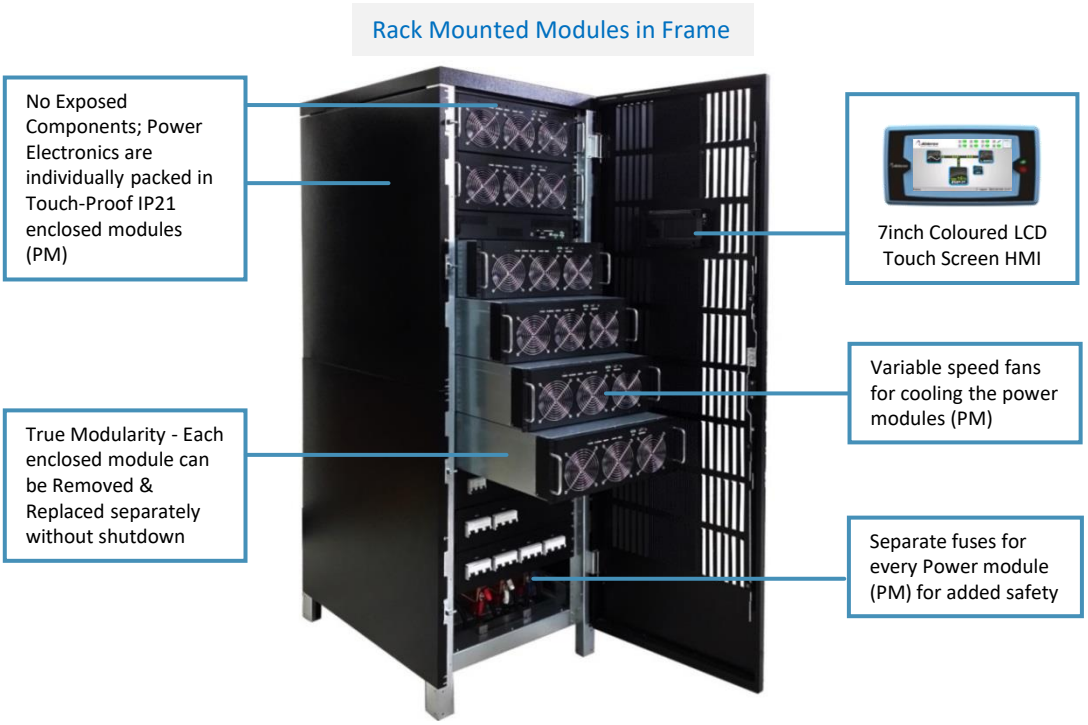

Expandable Capabilities:
Different Rated Current Filter System can be wired in parallel

The frame system features a precise modular design, and power modules (PM) are configured seamlessly in one frame. The frame system can be parallel and supplied accordingly to various application environment, and different Rated Current Filter Systems can be applied in parallel according to requirements.

- Operation up to 45°C ambient temperature at full compensation without derating.
- Rated current can be extended from 60A to 2,400A per Filter Systems.
- Modular concept: up to six power modules per frame.
- Extremely Low losses.
- Dynamic compensation of reactive power, harmonics, and flicker, as well as load balancing in one frame.

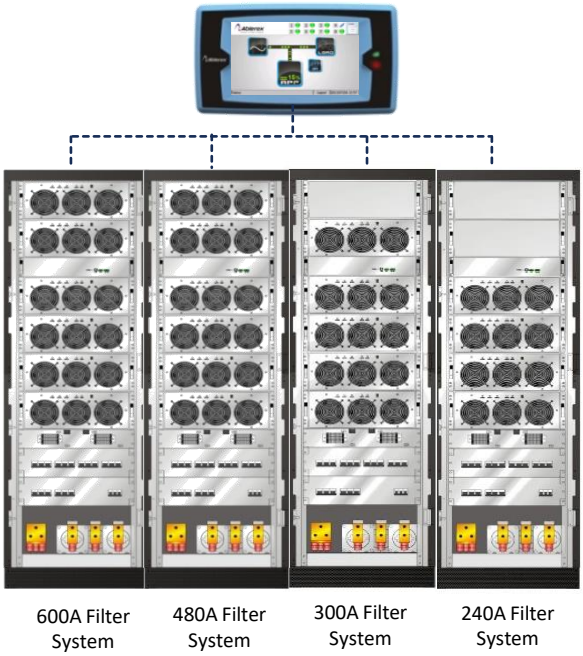

Technical Specification – Rack-Mount Frame System

Maximum Compensating Current Per Phase		**60A_{RMS} per power module**	**80A_{RMS} per power module**	**100A_{RMS} per power module**
Maximum Neutral Compensating Current		3 times of compensating phase current		
Maximum Scalable Current Per System		1,440A_{RMS} (24nos. × 60A_{RMS} power module)	1,920A_{RMS} (24nos. × 80A_{RMS} power module)	2,400A_{RMS} (24nos. × 100A_{RMS} power module)
		Multiple systems can operate in parallel to increase capacity.		
Nominal Operating Voltage		208V +15%, -20% 400V +15%, -20% 480V +10%, -20%		
Phase/Wires		208V / 400V: 3 phase 3 wires or 4 wires (Selectable) 480V: 3 phase 3 wires only		
Nominal Frequency		50/60Hz ± 5% (Auto Sensing)		
Compensated Harmonic Orders		Global Mode: From 2nd to 51st order, including Even orders Selective Mode : Up to 30 orders simultaneously		
Harmonic Attenuation Factor (I_H(source)/I_H(load))		Typical ≥ 97% at rated load		
Power Factor Correction (Reactive Current)		Power factor correction is programmable from 0.6 lagging to 0.6 leading		
Load Balancing		Both phase to phase and phase to neutral		
Programmable Filtering Mode		1. Harmonic compensation only. 2. Power Factor (Reactive Current) compensation only 3. Harmonic compensation priority + Power Factor compensation 4. Power Factor compensation priority + Harmonic compensation 5. Harmonic compensation priority + Power Factor compensation + Load Balancing		
CT Ratio		Programmable Primary Current: 100A~10000A Programmable Secondary Current: 1A/5A		
CT Location		Source Side: Close Loop Control or Load Side: Open Loop Control		
Response Time		Harmonic Compensation <1ms, Reactive Current Injection <20ms		
Inrush Current		Less than rated current		
Current Limitation		Yes, limit at rated current		
Maximum Heat losses At Full Capacity	208V	~700 Watts	~920 Watts	~1125 Watts
	400V / 480V	~1250 Watts	~1650 Watts	~2000 Watts
Power Electronics		3-Level IGBT Technology		
Cooling		Forced air cooling with speed-controlled fans		
Noise Level		<65 dBA		
Interfaces		Ethernet (TCP/IP), RS-485 (Modbus RTU Protocol), USB, 3x Output Dry Contact and 1x Input Dry Contact, 1x EPO		
EMC Class Compliance		EN 55011, EN 61000-6, EN 61000-3, EN 61000-4		
Safety Standard		Complies to EN 50178		
Harmonic Standard		According to EN 61000-3-4, IEEE 519		
Design Standard		According to EN 60146		
Protection Index		IP21 (Modules & Frame), other IP options available on demand		
Dimension & Weight for Control Module (CM)		440 (W) x 630 (D) x 88 (H),mm ; 10kg		
Dimension & Weight for Power Module (PM)		440 (W) x 630 (D) x 176 (H),mm; 36kg	440 (W) x 630 (D) x 176 (H),mm; 43kg	440 (W) x 630 (D) x 176 (H),mm; 45kg

Enersine™ Maxi Frame
Frame Dimension: 600 (W) x 900 (D) x 1950 (H), mm
Frame Weight (without CM and PM): 196kg
(i) 6Nos. x 60A PM (max. 360A), 6Nos x 80A PM (max. 480A)
(iii) 6Nos x 100A PM (600A),

Enersine™ Midi Frame
Frame Dimension: 600 (W) x 900 (D) x 1500 (H), mm
Frame Weight (without CM and PM): 150kg
(i) 4Nos. x 60A PM (240A), (ii) 4Nos x 80A PM (320A),
(iii) 4Nos x 100A PM (400A)

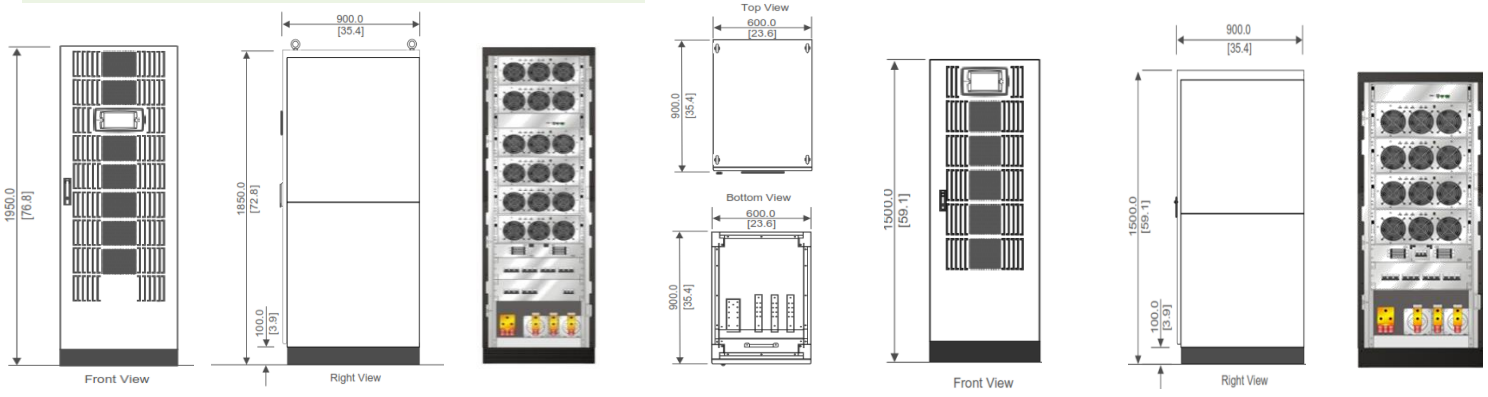

Our Organization

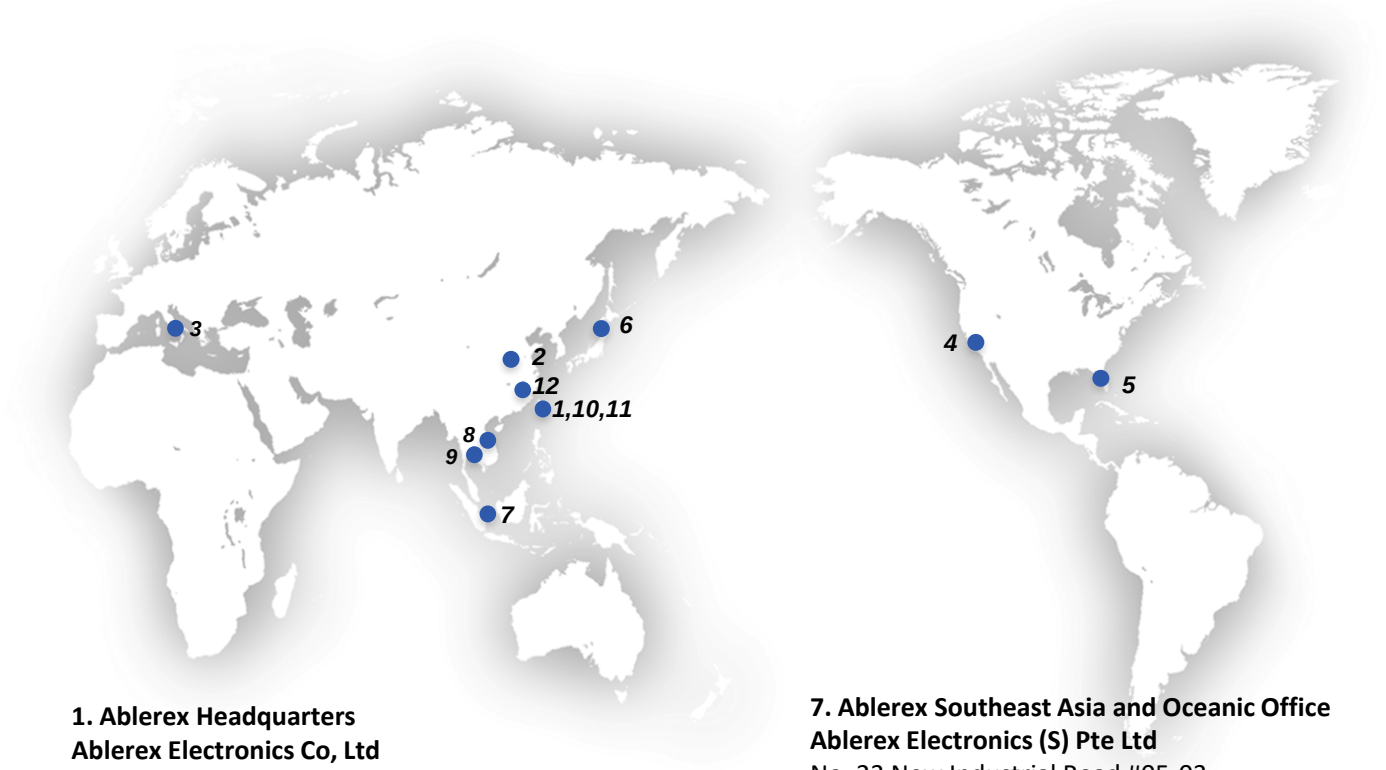

1. Ablerex Headquarters
Ablerex Electronics Co, Ltd
1F, No.3, Lane 7, Baogao Road, Xindian District,
New Taipei City 23144, Taiwan, R.O.C
Tel: +886-2-2917-6857 Fax: +886-2-2913-1705
http://www.ablerex.com.tw

2. Ablerex China Office
Ablerex Electric (Beijing) Co., Ltd.
A-9C1 Golden Resources Business Center,
No.2 East Road, LanDianChang
HaiDian District, Beijing, China
Tel: +86-10-8886-5103

3. Ablerex Europe Office
Ablerex Electronics Italy srl
Viale Milanofiori – Strada 6, Palazzo N1
20089 Rozzano (MI)
Tel: +39 0444323061

4. Ablerex USA Office
Ablerex Corporation
1175 South Grove Ave. Suite 103
Ontario, CA 91761 USA
Tel: +1-909-930-0201

5. Ablerex Latin America Office
Ablerex Latam Corporation
3785 NW 82nd Avenue, Suite 406 Doral
Florida 33166, USA
Tel: +1-786-786-ABLE

6. Ablerex Japan Office
WADA DENKI Co.,Ltd
1-19-6, Ningyocho, Nihonbashi, Chuo-ku, Tokyo
Japan, Nakajima, Makino Building 201
Post Code: 103-0013
Tel: +81-3-6661-6447

7. Ablerex Southeast Asia and Oceanic Office
Ablerex Electronics (S) Pte Ltd
No. 23 New Industrial Road #05-03
Solstice Business Center Singapore 536209
Tel: +65 6282 6535 Fax: +65 6282 6343
http://www.ablerex.com.sg
Email: sales@ablerex.com.sg

8. Ablerex Vietnam Office
Ablerex Vietnam Co., Ltd.
No. 19 S9 Street., Tay Thanh Ward, Tan Phu District
Ho Chi Minh City, Vietnam
Tel: +84-9-6119 0309

9. Ablerex Thailand Office
Ablerex Electronics (Thailand) Co., Ltd.
18 Srichaloernchai Building, Room 8H, 8th Floor
Tiwanon Building, Taladkwan, Muang,
Nonthaburi 11000 Thailand
Tel: +66-2-0498262

10. Ablerex R&D Centre - Kaohsiung, Taiwan
Ablerex Electronics Co., Ltd.
No. 157, Shuiyuan Rd., Sanmin District
Kaohsiung City 80766, Taiwan

11. Ablerex Pingtung Manufacturing Plant
Ablerex Electronics Co., Ltd
No.1-1 Gongye Road., Pingtung City,
Pingtung County 90049, Taiwan, R.O.C

12. Ablerex Suzhou Manufacturing Plant
Ablerex Electronics (Suzhou) Co.,Ltd
No. 36 Wang Wu Road, Wu Zhong District
Suzhou, 215128 P.R. China